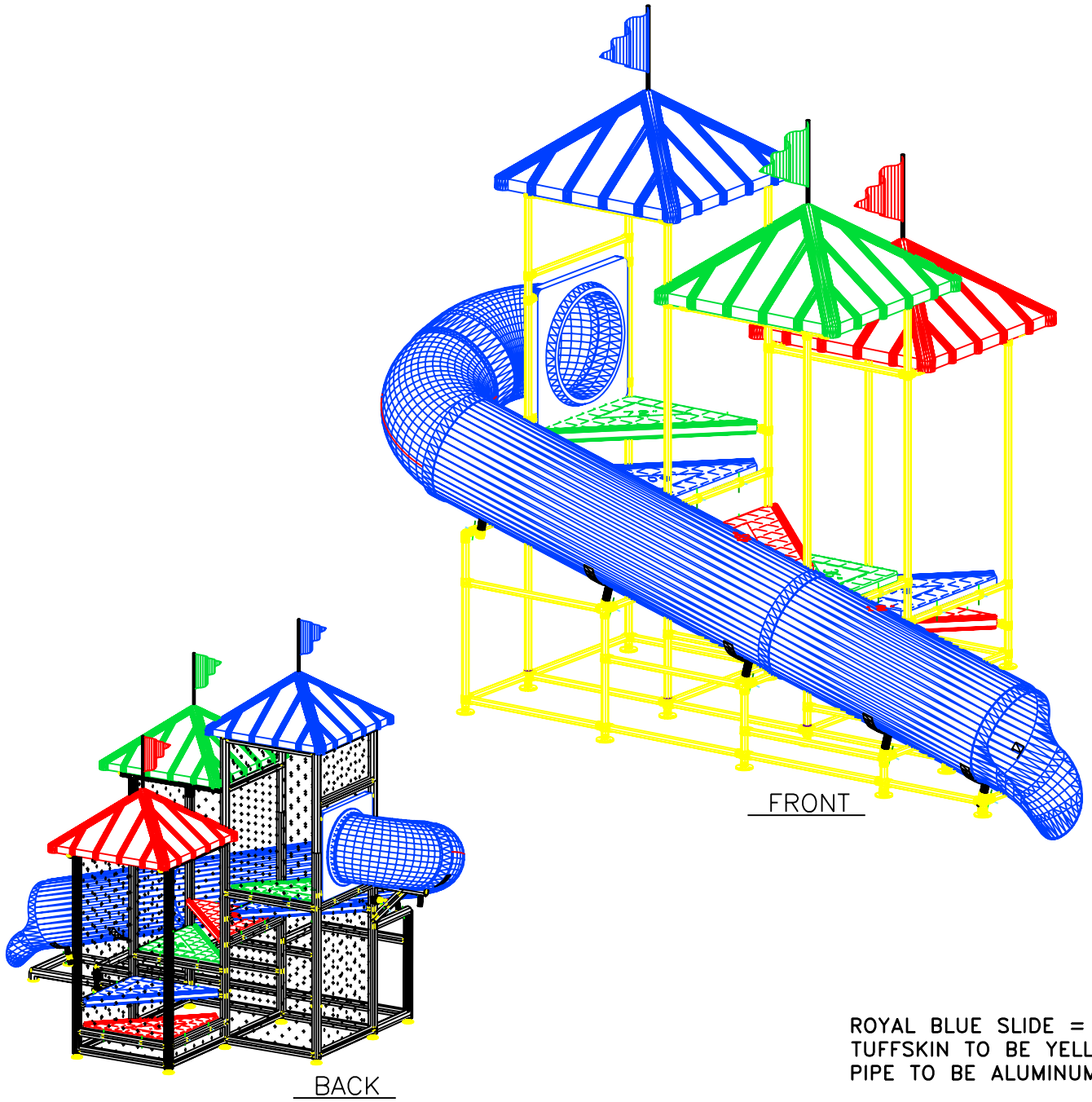

ROYAL BLUE SLIDE = 25'
TUFFSKIN TO BE YELLOW
PIPE TO BE ALUMINUM

PERSPECTIVE VIEWS

SCALE: NONE

6

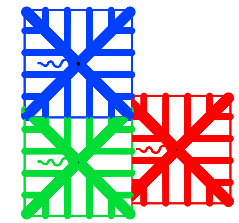

THIRD LEVEL

SCALE: 1/4" = 1'

3

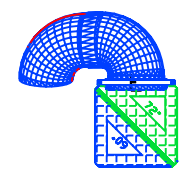

SECOND LEVEL

SCALE: 1/4" = 1'

2

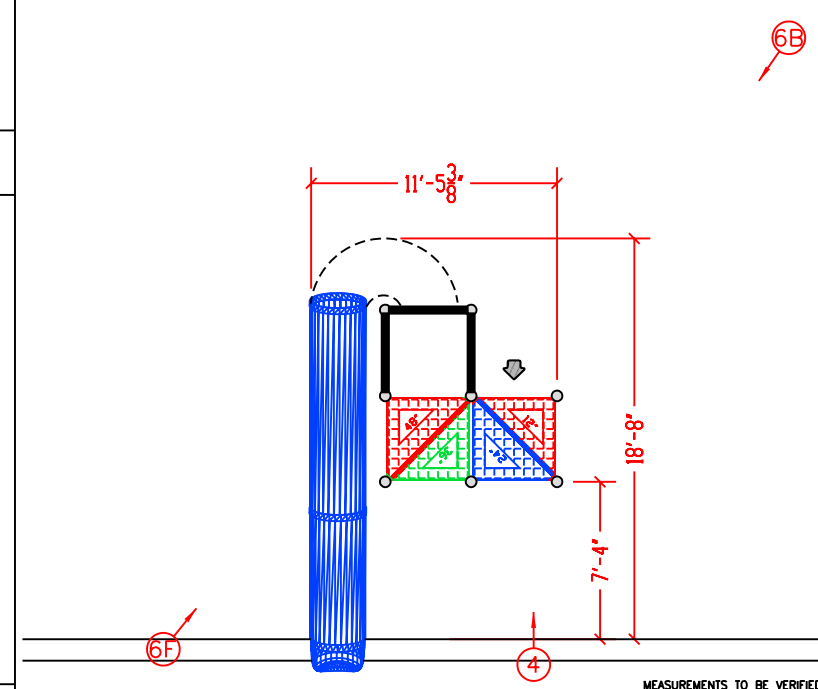

MEASUREMENTS TO BE VERIFIED BY CUSTOMER AND SITE PREPARATION NOTES ARE TO BE REVIEWED PRIOR TO PURCHASE: I.E. APPROVED AS DRAWN:

FIRST LEVEL

SCALE: 1/4" = 1'

1

CONCRETE SHOULD BE RECESSED 2" INSIDE BLUE DASHED LINE FOR "POURED IN PLACE SURFACING".

NOTE:
RECESS SLAB FOR "POURED IN PLACE" SURFACING, ONLY. TILED SURFACES CANNOT BE RECESSED PER SPECIFICATIONS. STRONGLY RECOMMEND AREA DIRECTLY BENEATH PLAYGROUND SHOULD BE PAINTED OR TILED FOR INDOOR UNITS.

SLAB DETAIL

SCALE: 1/8" = 1'

5

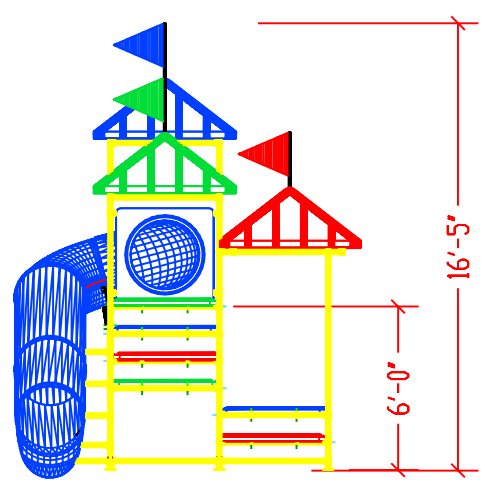

FRONT VIEW

SCALE: NONE

4