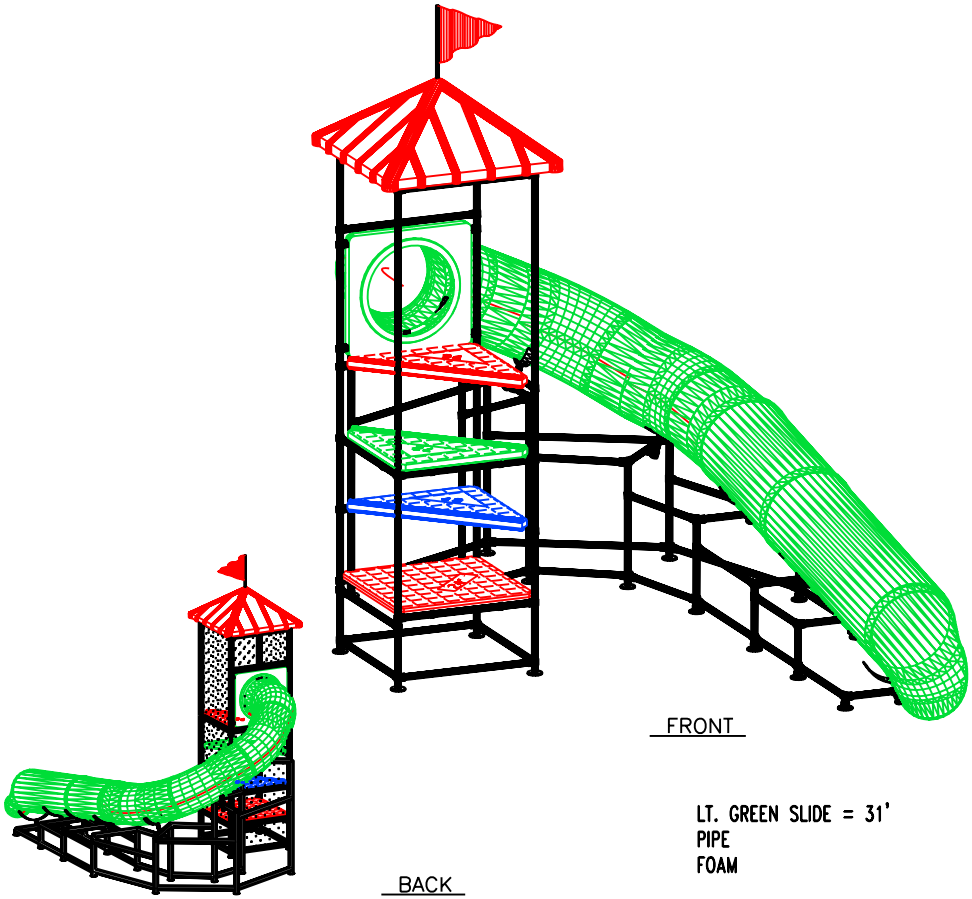


PERSPECTIVE VIEWS

SCALE: NONE

6

THIRD LEVEL

SCALE: 1/4" = 1'

3

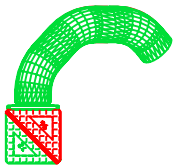

SECOND LEVEL

SCALE: 1/4" = 1'

2

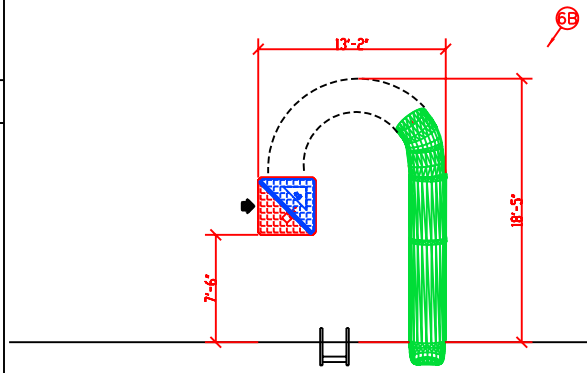


MEASUREMENTS TO BE VERIFIED BY CUSTOMER PRIOR TO PURCHASE. APPROVED AS DRAWN

FIRST LEVEL

SCALE: 1/4" = 1'

1

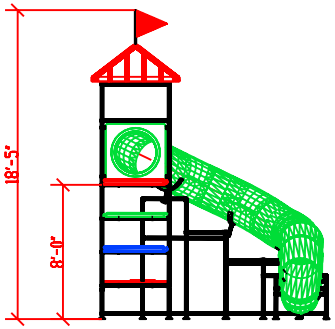


FRONT VIEW

SCALE: NONE

4

SLAB DETAIL

SCALE: 1/8" = 1'

5

NOTE:
RECESS SLAB FOR "POURED IN PLACE" SURFACING ONLY. TILES SURFACES CANNOT BE RECESSED PER SPECIFICATIONS.